<- Longer: Outside of SQM4 module

<> Medium: Limited function

-> Shorter: On board only

MICROPROCESSOR I/O PINS

U1-B

Signal	Pin	Pin	Signal
RMII_CLK	N5		
SDHC_CD	V15		
JTCLK	K4		
JTDI	K2		
JTDO	K1		
TRACECK/EXT_AUDIO_MCLK	L1		
	L3		
TRACED0/SAI2_TX_BCLK	Y5		
TRACED1	Y6		
TRACED2/SAI2_TX_DATA	V6		
TRACED3/SAI2_TX_SYNC	U6		
PTA20	B18		
SAI2_RX_BCLK	D18		
SAI2_RX_DATA	E17		
SAI2_RX_SYNC	C17		
SDHC_CLK	R16		
SDHC_CMD	R17		
SDHC_DAT0	R19		
SDHC_DAT1	P20		
SDHC_DAT2	P18		
SDHC_DAT3	P17		
PTA30	P16		
PTA31			
PTB0	T6		
PTB1	T7		
PTB2	V7		
PTB3	W7		
SCI1_TX	Y7		
SCI1_RX	Y8		
SCI1_RTS	W6		
SCI1_CTS	D13		
PTB8	J16		
PTB9	J19		
SCI0_TX	B15		
SCI0_RX	D14		
SCI0_RTS	E13		
PTB13	D15		
I2C0_SCL	B14		
I2C0_SDA	A14		
CAN1_RX	C14		
CAN1_TX	A15		
EXT_AUDIO_MCLK	B12		
DSPI0_PCS	C13		
DSPI0_SIN	A13		
DSPI0_SOUT	E12		
DSPI0_SCK	D12		
PTB23	A19		
	A18		
NF_WE_B	B17		
NF_CE_B	A17		
PTB26	U8		
NF_RE_B	A16		
PTB28			
RMII0_MDC	L4		
RMII0_MDIO	L5		
RMII0_CRS_DV	M5		
RMII0_RXD1	M3		
RMII0_RXD0	L2		
RMII0_RXER	M1		
RMII0_TXD1	N1		
RMII0_TXD0	N2		
RMII0_TXEN	N4		
RMII1_MDC	T15		
RMII1_MDIO	U15		
RMII1_CRS_DV	P4		
RMII1_RXD1	P3		
RMII1_RXD0	P1		
RMII1_RXER	R1		
RMII1_TXD1	P2		
RMII1_TXD0	R3		
RMII1_TXEN	R4		
NF_RB_B	D16		
NF_ALE	E16		
NF_CLE	E15		
	C16		
PTC29	T8		
PTC30	W5		
PTC31			
EXTAL_MAIN	Y13		
XTAL_MAIN	W13		
EXTAL32_RTC	V12		
XTAL32_RTC	W12		
EXT_TAMPER0	T14		
EXT_TAMPER1	U14		
EXT_TAMPER2	T13		
EXT_TAMPER3	U13		
	U12		
	U10		
	T1		
RESET_B	T4		

Signal	Pin	Pin	Signal
PTD0/QSPI0_A_SCK/SCI2_TX/FB_AD15/SPDIF_>	Y17		SCI2_TX
PTD1/QSPI0_A_CS0/SCI2_RX/FB_AD14/SPDIF_>	Y18		SCI2_RX
PTD2/QSPI0_A_DATA3/SCI2_RTS/SPI1_PCS3/F>	V18		SCI2_RTX
PTD3/QSPI0_A_DATA2/SCI2_CTS/SPI1_PCS2/F>	Y19		SCI2_CTS
PTD4/QSPI0_A_DATA1/SPI1_PCS1/FB_AD11/SP>	W19		PTD4
PTD5/QSPI0_A_DATA0/SPI1_PCS0/FB_AD10	W20		PTD5
PTD6/QSPI0_A_DQS/SPI1_SIN/FB_AD9	V20		PTD6
PTD7/QSPI0_B_SCK/SPI1_SOUT/FB_AD8	V19		PTD7
PTD8/QSPI0_B_CS0/FB_CLKOUT/SPI1_SCK/FB_>	U17		PTD8
PTD9/QSPI0_B_DATA3/SPI3_PCS1/FB_AD6/SAI>	U18		PTD9
PTD10/QSPI0_B_DATA2/SPI3_PCS0/FB_AD5/DC>	U20		PTD10
PTD11/QSPI0_B_DATA1/SPI3_SIN/FB_AD4	T20		PTD11
PTD12/QSPI0_B_DATA0/SPI3_SOUT/FB_AD3	T19		PTD12
PTD13/QSPI0_B_DQS/SPI3_SCK/FB_AD2	T18		PTD13
PTD16/FB_AD16/NF_IO0/ESAI_HCKT/I2C1_SDA>	D20		NF_IO0
PTD17/FB_AD17/NF_IO1/ESAI_HCKR/I2C1_SCL>	E20		NF_IO1
PTD18/FB_AD18/NF_IO2/ESAI_FSR/I2C0_SDA/>	E18		NF_IO2
PTD19/FB_AD19/NF_IO3/ESAI_SCKR/I2C0_SCL>	F16		NF_IO3
PTD20/FB_AD20/NF_IO4/ENET0_1588_TMR3/SD>	F17		NF_IO4
PTD21/FB_AD21/NF_IO5/ENET0_1588_TMR2/SD>	F19		NF_IO5
PTD22/FB_AD22/NF_IO6/FTM2/CH1/ENET0_1588>	F20		NF_IO6
PTD23/FB_AD23/NF_IO7/FTM2/CH0/ENET0_1588>	G20		NF_IO7
PTD24/FB_AD24/NF_IO8/FTM3_CH7	G19		PTD24
PTD25/FB_AD25/NF_IO9/FTM3_CH6	G18		PTD25
PTD26/FB_AD26/NF_IO10/FTM3_CH5/SDHC1_WP	G16		PTD26
PTD27/FB_AD27/NF_IO11/I2C2_SDA/FTM3_CH4>	H16		DSPI2_SCK
PTD28/FB_AD28/NF_IO12/I2C2_SCL/FTM3_CH3>	H17		DSPI2_SOUT
PTD29/FB_AD29/NF_IO13/FTM3_CH2/SPI2_SIN	H18		DSPI2_SIN
PTD30/FB_AD30/NF_IO14/FTM3_CH1/SPI2_PCS0	H20		DSPI2_PCS
PTD31/FB_AD31/NF_IO15/FTM3_CH0/SPI2_PCS1	J20		PTD31
PTE0/BOOTMOD1/DCU0_HSYNC/DCU0_TCON1/LCD>	N16		DCU0_HSYNC/BOOTMOD1
PTE1/BOOTMOD0/DCU0_VSYNC/DCU0_TCON2/LCD1	N18		DCU0_VSYNC/BOOTMOD0
PTE2/DCU0_PCLK/LCD2	N19		DCU0_PCLK
PTE3/DCU0_TAG/DCU0_TCON0/LCD3	Y15		DCU0_TAG/DCU0_TCON0
PTE4/DCU0_DE/DCU0_TCON3/LCD4	N20		DCU0_DE/DCU0_TCON3
PTE5/DCU0_R0/LCD5	T16		DCU0_R0
PTE6/DCU0_R1/LCD6	W16		DCU0_R1
PTE7/RCON0/DCU0_R2/LCD7	M20		DCU0_R2
PTE8/RCON1/DCU0_R3/LCD8	M19		DCU0_R3
PTE9/RCON2/DCU0_R4/LCD9	M17		DCU0_R4
PTE10/RCON3/DCU0_R5/LCD10	M16		DCU0_R5
PTE11/RCON4/DCU0_R6/LCD11	L16		DCU0_R6
PTE12/RCON5/DCU0_R7/SPI1_PCS3/LCD12/LPT>	L17		DCU0_R7
PTE13/DCU0_G0/LCD13	Y16		DCU0_G0
PTE14/DCU0_G1/LCD14	W15		DCU0_G1
PTE15/RCON6/DCU0_G2/LCD15	L18		DCU0_G2
PTE16/RCON7/DCU0_G3/LCD16	L20		DCU0_G3
PTE17/RCON8/DCU0_G4/LCD17	K20		DCU0_G4
PTE18/RCON9/DCU0_G5/LCD18	K19		DCU0_G5
PTE19/RCON10/DCU0_G6/LCD19/I2C0_SCL	K18		DCU0_G6
PTE20/RCON11/DCU0_G7/LCD20/I2C0_SDA/EWM>	A12		DCU0_G7
PTE21/DCU0_B0/LCD21	V16		DCU0_B0
PTE22/DCU0_B1/LCD22	W17		DCU0_B1
PTE23/RCON12/DCU0_B2/LCD23	J17		DCU0_B2
PTE24/RCON13/DCU0_B3/LCD24	D19		DCU0_B3
PTE25/RCON14/DCU0_B4/LCD25	C19		DCU0_B4
PTE26/RCON15/DCU0_B5/LCD26	C20		DCU0_B5
PTE27/RCON16/DCU0_B6/LCD27/I2C1_SCL	B20		DCU0_B6
PTE28/RCON17/DCU0_B7/LCD28/I2C1_SDA/EWM>	K16		DCU0_B7
USB0_VBUS_DETECT	Y11		USB0_VBUS
USB0_DM	T9		USB0_DN
USB0_DP	T10		USB0_DP
USB0_GND	V10		
USB1_VBUS_DETECT	U9		USB1_VBUS
USB1_DM	V9		USB1_DN
USB1_DP	W9		USB1_DP
USB1_GND	Y9		
ADC0SE8	Y2		ADC0SE8
ADC0SE9	W2		ADC0SE9
ADC1SE8	W3		ADC1SE8
ADC1SE9	Y3		ADC1SE9
VADCSE0	Y4		
VADCSE1	U4		
VADCSE2	W4		
VADCSE3	V5		
DACO0	U1		DACO0
DACO1	U2		DACO1
LVDS0P	W14		
LVDS0N	Y14		
TEST	T3		

C4 22p, C16 22p

2 OF 3

VF65GS10MK
VF65GS10MK

RIM FRAME CONNECTION

U6

Signal	Pin	Pin	Signal
NONE/PTA6	1		PTA6/RMII_CLKOUT/RMII_CLKIN/DCU1_TCON11>
PTD28	2		PTD26/FB_AD26/NF_IO10/FTM3_CH5/SDHC1_WP
PTA30	3		PTA30/TRACED14/SAI3_RX_SYNC/ENET1_1588_>
PTA31	4		PTA31/TRACED15/SAI3_TX_SYNC/ENET1_1588_>
SCI1_TX	5		PTB4/FTM0_CH4/SCI1_TX/ADC0_SE4/LCD38/VI>
SCI1_RX	6		PTB5/FTM0_CH5/SCI1_RX/ADC1_SE4/LCD39/VI>
SCI1_RTS	7		PTB6/FTM0_CH6/SCI1_RTS/QSPI0_A_CS1/LCD40
SCI1_CTS	8		PTB7/FTM0_CH7/SCI1_CTS/QSPI0_B_/LCD41/V>
PTB8	9		PTB8/FTM1CH0/FTM1_QD_PHA/VIU_DE/DCU1_R6
PTB9	10		PTB9/FTM1CH1/FTM1_QD_PHB/DCU1_R7
SCI0_TX	11		PTB10/SCI0_TX/DCU0_TCON4/VIU_DE/CKO1/EN>
SCI0_RX	12		PTB11/SCI0_RX/DCU0_TCON5/SNVS_ALARM/OUT>
SCI0_RTS	13		PTB12/NMI/SCI0_RTS/SPI0_PCS5/DCU0_TCON6>
PTB13	14		PTB13/SCI0_CTS/SPI0_PCS4/DCU0_TCON7/FB_>
I2C0_SCL	15		PTB14/CAN0_RX/I2C0_SCL/DCU0_TCON8/DCU1_>
I2C0_SDA	16		PTB15/CAN0_TX/I2C0_SDA/DCU0_TCON9/VIU_P>
CAN1_RX	17		PTB16/CAN1_RX/I2C1_SCL/DCU0_TCON10
CAN1_TX	18		PTB17/CAN1_TX/I2C1_SDA/DCU0_TCON11
PTA20	19		PTA20/TRACED4/LCD33/SCI3_TX/DCU1_HSYNC/>
DSPI0_PCS	20		PTB19/SPI0_PCS0/VIU_DATA10/CCM_OBS1
DSPI0_SIN	21		PTB20/SPI0_SIN/LCD42/VIU_DATA11/CCM_OBS2
DSPI0_SOUT	22		PTB21/SPI0_SOUT/LCD43/VIU_DATA12/DCU1_P>
DSPI0_SCK	23		PTB22/SPI0_SCK/VLCD/VIU_FID
PTB23	24		PTB23/SAI0_TX_BCLK/SCI1_TX/FB_ALE/FB_TS>
PTB26	25		PTB26/RCON21/SAI0_TX_DATA/SCI1_CTS/FB_C>
PTB28	26		PTB28/RCON22/SAI0_RX_SYNC/SPI1_PCS2/FB>
PTC29	27		PTC29/RCON27/SAI1_TX_DATA/SPI0_PCS2/FB>
PTC30	28		PTC30/RCON28/SAI1_RX-SYNC/SPI1_PCS2/FB>
PTC31	29		PTC31/RCON29/SAI1_TX_SYNC/ADC1_SE5/DCU1>
PTD24	30		PTD24/FB_AD24/NF_IO8/FTM3_CH7
PTD25	31		PTD25/FB_AD25/NF_IO9/FTM3_CH6
DSPI2_SCK	32		PTD27/FB_AD27/NF_IO11/I2C2_SDA/FTM3_CH4>
DSPI2_SOUT	33		PTD28/FB_AD28/NF_IO12/I2C2_SCL/FTM3_CH3>
DSPI2_SIN	34		PTD29/FB_AD29/NF_IO13/FTM3_CH2/SPI2_SIN
DSPI2_PCS	35		PTD30/FB_AD30/NF_IO14/FTM3_CH1/SPI2_PCS0
PTD31	36		PTD31/FB_AD31/NF_IO15/FTM3_CH0/SPI2_PCS1
WIFI_DEBUG_UART_RXD	37		
WIFI_DEBUG_UART_TXD	38		
	39		
	40		
	41		
	42		
	43		
	44		
	45		
	46		
	47		
	48		
GND	49		GND_1
	50		GND_2
P5V	51		GND_3
	52		P5V_1
	53		P5V_2
	54		P5V_3
P3V3	55		VDD33_1
	56		VDD33_2
VBATIN	57		VBATIN
RESET_B	58		RESETB/RESET_OUT
USB0_DN	59		USB0_DM
USB0_DP	60		USB0_DP
USB0_VBUS	61		USB0_VBUS
USB1_DN	62		USB1_DM
USB1_DP	63		USB1_DP
USB1_VBUS	64		USB1_VBUS
	65		NC_3/USB2_DM
	66		NC_4/USB2_DP
NONE/PTC0	67		PTC0/RMII0_MDC/FTM1CH0/SPI0_PCS3/ESAI_S>
NONE/PTC1	68		PTC1/RMII0_MDIO/FTM1CH1/SPI0_PCS2/ESAI_>
TAP0/PTC2	69		PTC2/RMII0_CRS_DV/SCI1_TX/ESAI_SDO0/SDH>
TXP0/PTC3	70		PTC3/RMII0_RXD1/SCI1_RX/ESAI_SDO1/SDHC0>
TXN0/PTC4	71		PTC4/RMII0_RXD0/SCI1_RTS/SPI1_PCS1/ESAI>
RXP0/PTC5	72		PTC5/RMII0_RXER/SCI1_CTS/SPI1_PCS0/ESAI>
RXN0/PTC6	73		PTC6/RMII0_TXD1/SPI1_SIN/ESAI_SDI0/SDHC>
LED10/PTC7	74		PTC7/RMII0_TXD0/SPI1_SOUT/ESAI_SDI1/VIU>
LED20/PTC8	75		PTC8/RMII0_TXEN/SPI1_SCK/VIU_DATA8/DCU>
NONE/PTC9	76		PTC9/RMII1_MDC/ESAI_SCKT
NONE/PTC10	77		PTC10/RMII1_MDIO/ESAI_FST
TAP1/PTC11	78		PTC11/RMII1_CRS_DV/ESAI_SDO0
TXP1/PTC12	79		PTC12/RMII1_RXD1/ESAI_SDO1/SAI2_TX_BCLK
TXN1/PTC13	80		PTC13/RMII1_RXD0/ESAI_SDO2/SAI2_RX_BCLK

Signal	Pin	Pin	Signal
	81		PTC14/RMII1_RXER/ESAI_SDO3/SCI5_TX/SAI2>
	82		PTC15/RMII1_TXD1/ESAI_SDI0/SCI5_RX/SAI2>
	83		PTC16/RMII1_TXD0/ESAI_SDI1/SCI5_RTS/SAI>
	84		PTC17/RMII1_TXEN/ADC1_SE7/SCI5_CTS/SAI2>
	85		VREFH
	86		VREFL
	87		VSSA
	88		DACO0
	89		DACO1
	90		ADC0SE8
	91		ADC0SE9
	92		ADC1SE8
	93		ADC1SE9
	94		PTB0/FTM0_CH0/ADC0_SE2/TRACECTL/LCD34/S>
	95		PTB1/RCON30/FTM0_CH1/ADC0_SE3/LCD35/SAI>
	96		PTB2/RCON31/FTM0_CH2/ADC1_SE2/LCD36/SAI>
	97		PTB3/FTM0_CH3/ADC1_SE3/ETRIG/LCD37/VIU>
	98		PTD0/QSPI0_A_SCK/SCI2_TX/FB_AD15/SPDIF_>
	99		PTD1/QSPI0_A_CS0/SCI2_RX/FB_AD14/SPDIF_>
	100		PTD2/QSPI0_A_DATA3/SCI2_RTS/SPI1_PCS3/F>
	101		PTD3/QSPI0_A_DATA2/SCI2_CTS/SPI1_PCS2/F>
	102		PTD4/QSPI0_A_DATA1/SPI1_PCS1/FB_AD11/SP>
	103		PTD5/QSPI0_A_DATA0/SPI1_PCS0/FB_AD10
	104		PTD6/QSPI0_A_DQS/SPI1_SIN/FB_AD9
	105		PTD7/QSPI0_B_SCK/SPI1_SOUT/FB_AD8
	106		PTD8/QSPI0_B_CS0/FB_CLKOUT/SPI1_SCK/FB_>
	107		PTD9/QSPI0_B_DATA3/SPI3_PCS1/FB_AD6/SAI>
	108		PTD10/QSPI0_B_DATA2/SPI3_PCS0/FB_AD5/DC>
	109		PTD11/QSPI0_B_DATA1/SPI3_SIN/FB_AD4
	110		PTD12/QSPI0_B_DATA0/SPI3_SOUT/FB_AD3
	111		PTD13/QSPI0_B_DQS/SPI3_SCK/FB_AD2
	112		EXT_TAMPER0
	113		EXT_TAMPER1
	114		EXT_TAMPER2/EXT_WM0_TAMPER_IN
	115		EXT_TAMPER3/EXT_WM0_TAMPER_OUT
	116		PTA16/TRACED0/USB0_VBUS_EN/ADC1_SE0/LCD>
	117		PTA17/TRACED1/USB0_OC/ADC1_SE1/LCD30/US>
	118		PTA18/TRACED2/ADC0_SE0/FTM1_QD_PHA/LCD3>
	119		PTA19/TRACED3/ADC0_SE1/FTM1_QD_PHB/LCD3>
	120		PTB18/SPI0_PCS1/EXT_AUDIO_MCLK/VIU_DATA>
	121		PTA21/TRACED5/SAI2_RX_BCLK/SCI3_RX/DCU1>
	122		PTA22/TRACED6/SAI2_RX_DATA/I2C2_SCL/DCU>
	123		PTA23/TRACED7/SAI2_RX_SYNC/I2C2_SDA/DCU>
	124		PTA24/TRACED8/USB1_VBUS_EN/SDHC1_CLK/DC>
	125		PTA25/TRACED9/USB1_VBUS_OC/SDHC1_CMD/DC>
	126		PTA26/TRACED10/SAI3_TX_BCLK/SDHC1_DAT0/>
	127		PTA27/TRACED11/SAI3_RX_BCLK/SDHC1_DAT1/>
	128		PTA28/TRACED12/SAI3_RX_DATA/ENET1_1588_>
	129		PTA29/TRACED13/SAI3_TX_DATA/ENET1_1588_>
	130		PTA7/VIU_PIX_CLK/SDHC1_CD
	131		GND_4
	132		PTE0/BOOTMOD1/DCU0_HSYNC/DCU0_TCON1/LCD>
	133		PTE1/BOOTMOD0/DCU0_VSYNC/DCU0_TCON2/LCD1
	134		PTE2/DCU0_PCLK/LCD2
	135		PTE3/DCU0_TAG/DCU0_TCON0/LCD3
	136		PTE4/DCU0_DE/DCU0_TCON3/LCD4
	137		PTE5/DCU0_R0/LCD5
	138		PTE6/DCU0_R1/LCD6
	139		PTE7/RCON0/DCU0_R2/LCD7
	140		PTE8/RCON1/DCU0_R3/LCD8
	141		PTE9/RCON2/DCU0_R4/LCD9
	142		PTE10/RCON3/DCU0_R5/LCD10
	143		PTE11/RCON4/DCU0_R6/LCD11
	144		PTE12/RCON5/DCU0_R7/SPI1_PCS3/LCD12/LPT>
	145		PTE13/DCU0_G0/LCD13
	146		PTE14/DCU0_G1/LCD14
	147		PTE15/RCON6/DCU0_G2/LCD15
	148		PTE16/RCON7/DCU0_G3/LCD16
	149		PTE17/RCON8/DCU0_G4/LCD17
	150		PTE18/RCON9/DCU0_G5/LCD18
	151		PTE19/RCON10/DCU0_G6/LCD19/I2C0_SCL
	152		PTE20/RCON11/DCU0_G7/LCD20/I2C0_SDA/EWM>
	153		PTE21/DCU0_B0/LCD21
	154		PTE22/DCU0_B1/LCD22
	155		PTE23/RCON12/DCU0_B2/LCD23
	156		PTE24/RCON13/DCU0_B3/LCD24
	157		PTE25/RCON14/DCU0_B4/LCD25
	158		PTE26/RCON15/DCU0_B5/LCD26
	159		PTE27/RCON16/DCU0_B6/LCD27/I2C1_SCL
	160		PTE28/RCON17/DCU0_B7/LCD28/I2C1_SDA/EWM>

Quadrant A Quadrant C Quadrant B Quadrant D

4

SQM4_160_VF6

ETHERNET PHY I *

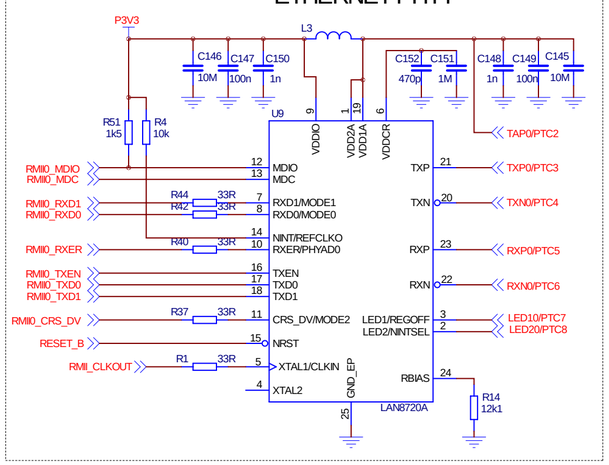

ETHERNET PHY II *

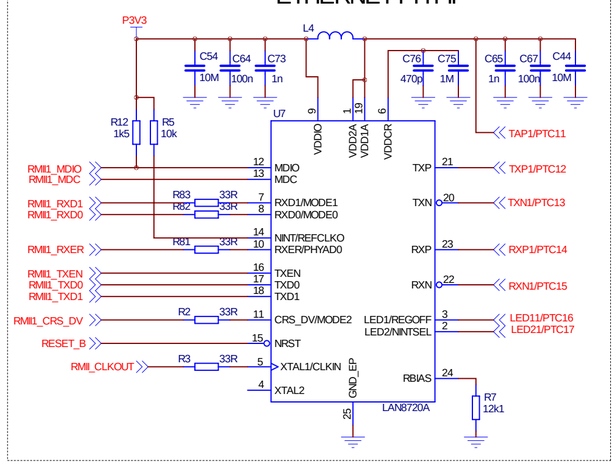

JTAG/JTRACE CONNECTOR

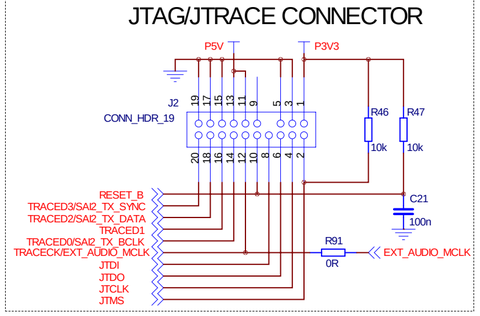

BOOT start value 10110110 - From SD Card

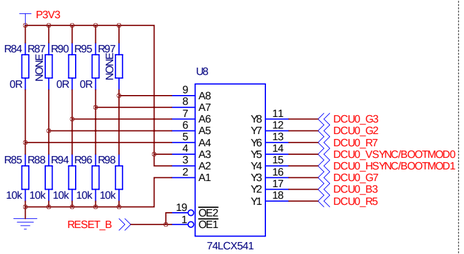

Main xtal

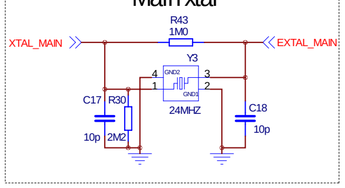

RTC xtal

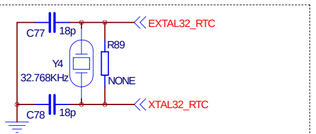

BOOT TABLE

MOD1 - MOD0 -RCON5-RCON6-RCON7-RCON11-RCON13-RCON3

SD Card:	1	0	1	1	0	1	1	0
NAND :	1	0	0	0	1	1	1	0
UART/USB:	0	1	x	x	x			
Fuses :	0	0	x	x	x			

* Eth Clock

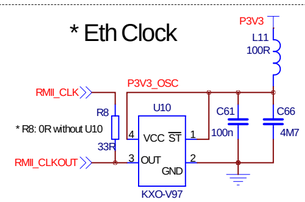

* Alternative placement

* Alternative placement to PHY I

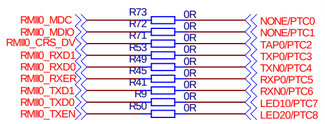

* Alternative placement to PHY II

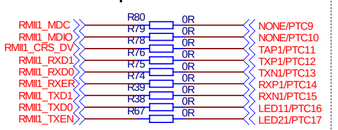

* Alternative placement to PHY I

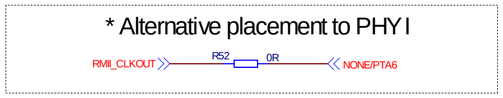

List cislo / Celkovy pocet: 2/3	Nazev: VF6_MCU-1	
	Platnost od: 11/2013	Cislo verze: V2.2
Dne: 11/2013	Kreslil: ELNICO	Project: SQM4-VF6